Malvern Panalytical
a spectris company

ZETASIZER NANO
SELF INSTALL GUIDE

Malvern Panalytical
a spectris company

ZETASIZER NANO
SELF INSTALL GUIDE

Publication date: Thursday, October 11, 2018
MAN0383-06-EN

DISCLAIMER

Although diligent care has been used to ensure that the information in this material is accurate, nothing herein can be construed to imply any representation or warranty as to the accuracy, correctness or completeness of this information and we shall not be liable for errors contained herein or for damages in connection with the use of this material. Malvern Panalytical reserves the right to change the content in this material at any time without notice.

COPYRIGHT NOTICE

© 2018 Malvern Panalytical. This publication or any portion thereof may not be copied or transmitted without our express written permission.

Malvern Panalytical Ltd.
Grovewood Road, Malvern,
Worcestershire, WR14 1XZ,
United Kingdom

Tel +44 1684 892456
Fax +44 1684 892789

Malvern Panalytical B.V.
Lelyweg 1, 7602 EA Almelo,
The Netherlands

Tel +31 546 534 444
Fax +31 546 534 598

info@malvernpanalytical.com

www.malvernpanalytical.com

Zetasizer Nano® is a registered trademark in the UK and /or other countries, and is owned by Malvern Panalytical.

Windows® is a registered trademark of the Microsoft Corporation.

CONTENTS

Chapter 1 Setting up the Zetasizer Nano 1

Introduction 2

Registration 3

Site requirements 3

Connect the system 4

Install the software 4

Power on and start the software 5

Optional software keys 7

Check the system 8

Chapter 2 Running the installation test 11

Introduction 12

Power on 12

Unpack the sample 12

Run the installation test 12

Perform the Size Test 13

Perform the Zeta Potential Test 16

Test results 20

Chapter 3 Making other measurements 23

Introduction 24

Running SOPs 24

CHAPTER 1 SETTING UP THE ZETASIZER NANO

Introduction 2

Registration 3

Site requirements 3

Connect the system 4

Install the software 4

Power on and start the software 5

Optional software keys 7

Check the system 8

Introduction

WARNING!
All users must read the Health and Safety information in the *Zetasizer Nano Basic Guide* before operating the system.

This section explains how to set up the instrument. The following sections show you how to make the initial test measurement, and then your own measurements in future.

WARNING!
Never lift the instrument by its covers. Always stand it on its feet, not its side.

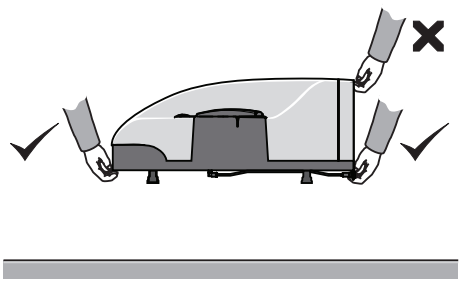

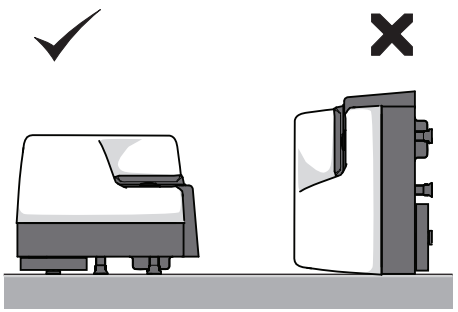

Registration

Register at malvernpanalytical.com to stay updated with the Zetasizer Nano range. In addition, our website contains training materials, technical notes and application examples available for registered users.

Site requirements

The site must be:

- Indoors and away from strong light (avoid windows).
- Away from heat sources like radiators.
- On a horizontal vibration-free bench.
- Well ventilated (if measuring noxious materials).

Allow space for the instrument as shown below (see the *Zetasizer Nano Basic Guide* for the full requirements):

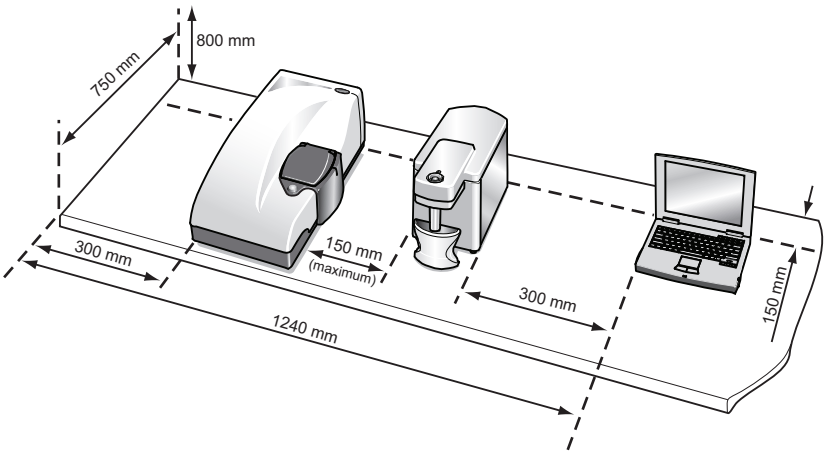

Connect the system

WARNING!
This instrument must be connected to a protective earth!

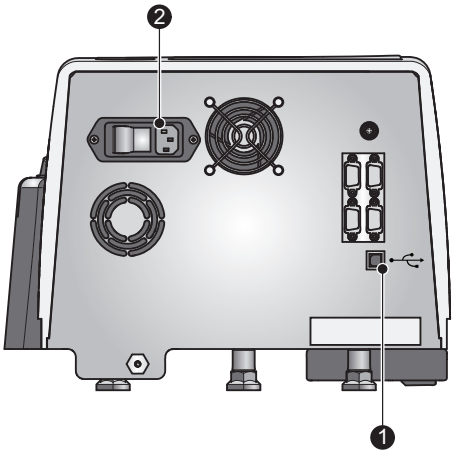

1. Unpack the cables from the Installation kit.
2. Connect the USB cable to the USB connectors on the instrument [1] and the computer.
3. Connect the power cables to the power socket [2] on the back of the instrument.
4. Make all computer connections (keyboard, power, etc.), following the maker's instructions.

Install the software

1. Insert the Zetasizer Software CD in the CD drive.
2. If Autorun is enabled on the computer, the software will display an introductory screen. If Autorun is not enabled, double-click the file Setup on the CD to display this screen.
3. Click the Click here to install... link and follow all on-screen instructions to complete the installation.

Power on and start the software

1. Turn on the instrument by pressing the power switch [1] on the back of the instrument:

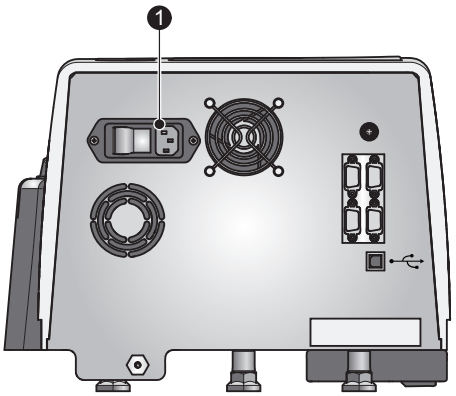

Note:
On initial switch on and connection of the instrument to the computer, the message **Found new USB device** or similar will appear. Once the computer has been configured for use with the instrument, this message will no longer appear.

2. Start the software by double-clicking the icon:

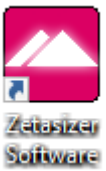

3. As this is the first time using the software, the following window is shown. Click **OK**.

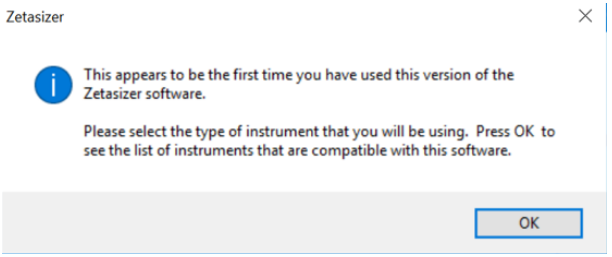

Figure 1.1 *First time use window*

4. The Instrument selector window is now displayed. Select **Zetasizer Nano** and click **OK**.

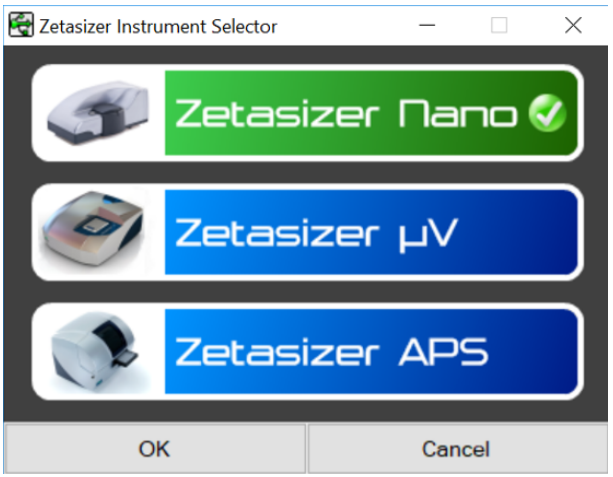

Figure 1.2 *Instrument selector window*

5. If this window is displayed, it will show your Windows login name. Click **OK**.

Figure 1.3 Windows login window

Note:
The instrument **must be powered up for 30 minutes before a measurement is made** to ensure its temperature has stabilized.

Optional software keys

Optional software keys may have been provided with the system. To install these:

1. Select the command **Tools**-**Options**:

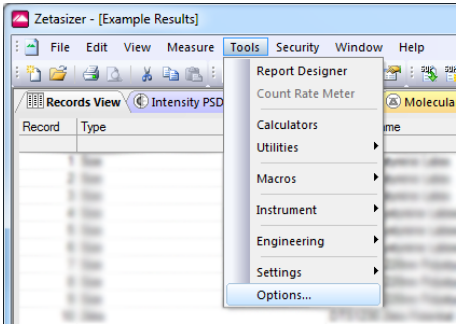

Figure 1.4 The Tools tab

2. Select **Feature Keys** from the **Options** window.

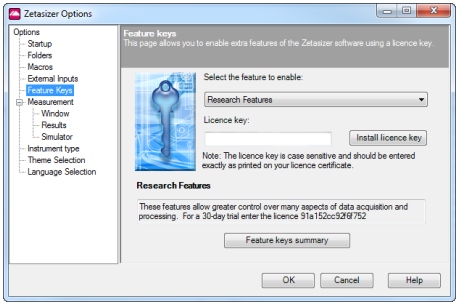

Figure 1.5 *Feature Keys tab*

3. Copy the Licence key from the shipped documentation into the input field and click **Install Licence Key**.

Check the system

The status light [1] turns green if the system has connected successfully. If it is green proceed to Chapter 2.

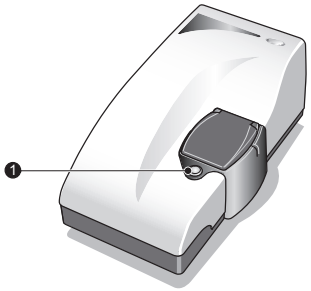

In case of failure

If the light is not green, use this table to try to solve the problem. If the status light still does not turn green after this, contact the local Malvern Panalytical representative.

Table 1.1 Status light appearance

Light appearance	Action to take
Light not illuminated	This shows there is no power. Check that: • The power lead is connected. • The instrument is switched on. If the above suggestions do not help, replace the fuses as shown in the **Basic Guide** (this is a task for the supervisor; not operators).
Amber Light	If there is no "system not responding" message on the computer screen: • Check that the software is running. • Check that you have logged on. If there is a "system not responding" message on the computer screen: • Check that the lead between the computer and the instrument is connected. Reconnect and click **OK** on the screen; this should make the status light green. • Check that the computer's USB port is set up correctly; refer to the computer's documentation or online help.
Red Light	This indicates an internal error with the system. Contact the local Malvern Panalytical representative.

CHAPTER 2 RUNNING THE INSTALLATION TEST

Introduction 12
Power on 12
Unpack the sample 12
Run the installation test 12
Perform the Size Test 13
Perform the Zeta Potential Test 16
Test results 20

Introduction

This chapter shows how to make a size and/or zeta potential measurement to test the installation of the Zetasizer Nano. Work through the steps in the order given here.

Power on

Power on the instrument and start the software, as described in the previous chapter. The instrument must be powered up for 30 minutes before a measurement is made.

Unpack the sample

Take the zeta potential transfer standard (DTS 1237) syringe from the installation kit box.

Note:
Once unpacked, store the zeta potential transfer standard in a refrigerator at a temperature range of 4 - 8 °C. If the standard is stored outside this range, it could give inaccurate test responses.

Run the installation test

1. Start the software and select Tools-Macros-Installation Test:

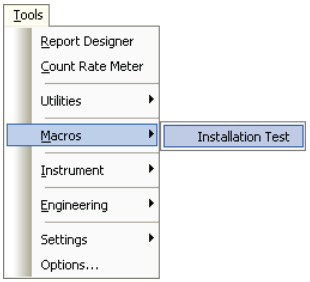

Figure 2.1 *Tools tab*

Note:
The results are saved to a measurement file named **Installation Test.dts** which opens automatically.

2. The instrument reports the purpose of the test: size, zeta potential or both. Use this information to decide which cell(s) to prepare.

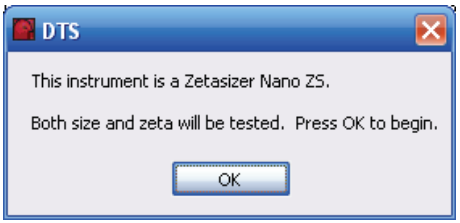

Figure 2.2 Test information window

Note:
The type of test(s) performed depends on the instrument's specification – **S: size**, **Z: zeta potential** and **ZS or ZS90: both zeta potential and size**.

Perform the Size Test

Perform the following steps to run the **Size Test**:

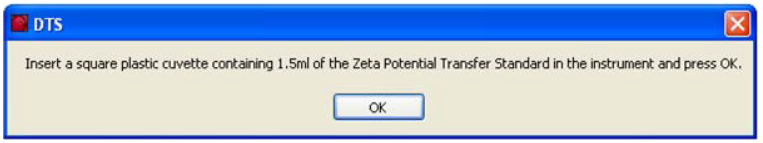

Load the appropriate cell in the instrument, following the procedures below, then click **OK**.

1. Remove the square plastic cuvette (not the glass one) from the consumables pack.
2. Fill the cuvette with between 1.0 mL and 1.5 mL of the supplied zeta potential transfer standard from the syringe, as follows.
   a. Tilt the cuvette and allow is to fill slowly.

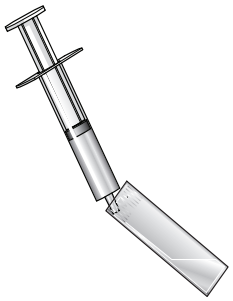

Tip:
To stop bubbles from forming, let the sample flow down the inside.

   b. Check to ensure the sample depth is between 10 mm and 15 mm by placing the cuvette against the diagram on the inside of the cell area lid:

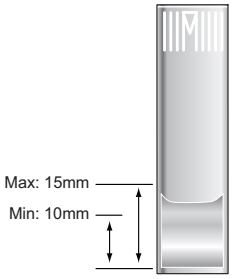

3. Push the lid securely onto the cuvette:

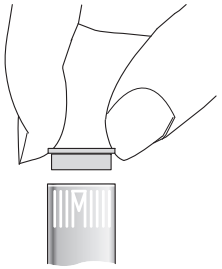

Note:
Most cuvettes have a triangle or spot mark, as shown below. This mark **must** face towards the front of the Zetasizer Nano.

4. Press the button to open the chamber lid:

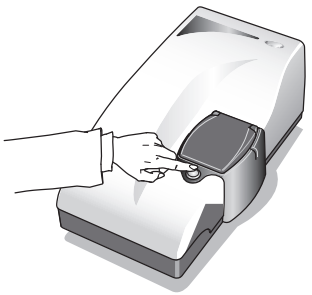

5. Push the cuvette down so that it is firmly located and then push the chamber lid down.

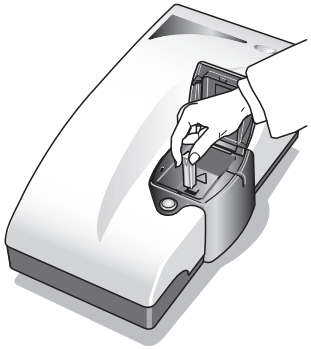

6. See Test results on page 20 to continue.

Perform the Zeta Potential Test

Cell preparation

Flush the cell to ensure cleanliness and reduce risk of bubble formation. The recommended procedure requires two syringes; filtered deionized (DI) water; and ethanol or methanol:

1. Flush the cell with ethanol or methanol to facilitate wetting.
2. Fill one of the syringes with the deionized water and place in one of the sample ports on the cell. Place the empty syringe into the other port.
3. Flush the contents of the full syringe, through the capillary, into the empty syringe, then flush back.
4. Repeat this process 4 more times before removing the syringes and performing a final flush with the dispersant being used for the measurement.

After this, the cell is ready for use.

Note:
Never attempt to clean the optical surface of the folded capillary cell as this will cause small surface scratches that will give inaccurate results.

Zeta Potential Test

Perform the following steps to run the **Zeta Potential Test**:

Load the appropriate cell in the instrument, following the procedures below, then click **OK**.

1. Clean the cell according to the cell preparation steps above.
2. Press the button to open the measurement chamber:

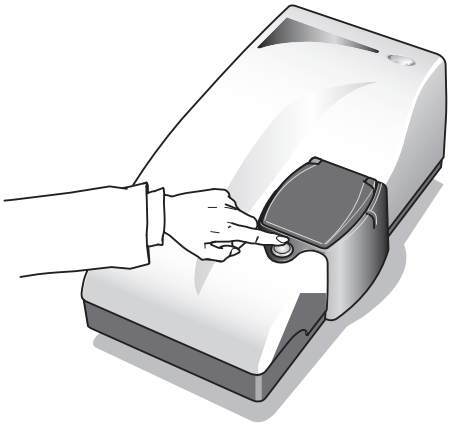

3. Fill the cell according to the following directions:

DTS1070 cell

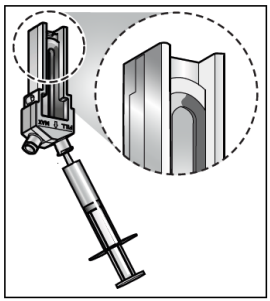

Invert the cell and slowly inject the sample from its syringe into the cell, filling the U tube to just over half way.

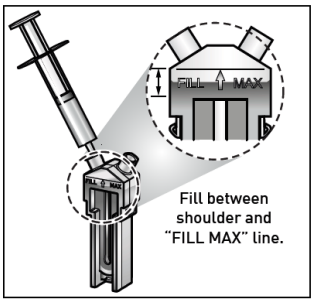

Check no air bubbles form in the cell - Tap the cell gently to dislodge any that form. Turn the cell upright and continue injecting slowly until the liquid reaches the fill area as shown. Remove syringe.

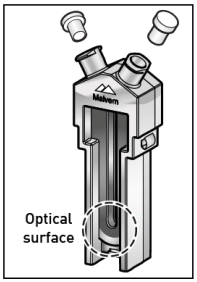

Fit one stopper firmly, the other one loosely, to avoid pressurisation of the cell. Remove any spillage from the electrodes.

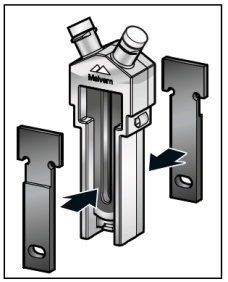

Fit the thermal contact plates as shown.
These are stored in the pull out cuvette holder, located under the instrument.

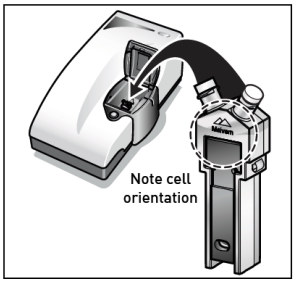

When inserting the cell, ensure that the Malvern logo faces towards the front of the instrument. Press down until the cell clicks into place. Before starting an experiment, ensure the software is set up to use the DTS1070 cell.

4. Insert the cell into the cell holder, until it stops, then close the measurement lid:

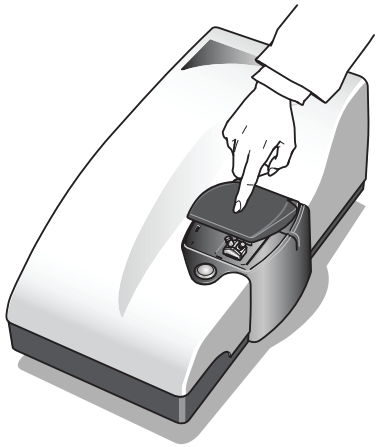

5. See the test results on the facing page to continue.

Test results

Each test should take no longer than about six minutes.

1. After a two minute thermal equilibration period, the window will show the test running, like this:

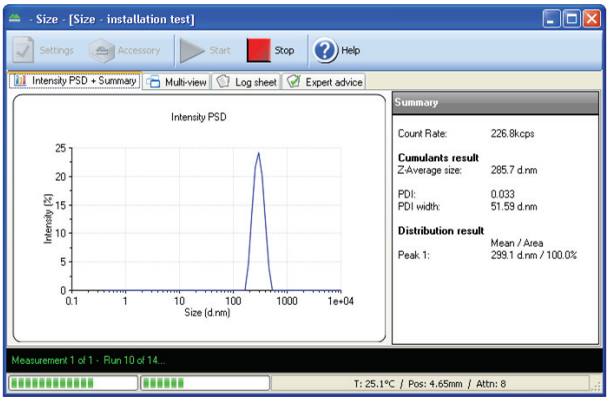

Figure 2.3 *Size installation test*

2. The test reports whether the system passed or failed:

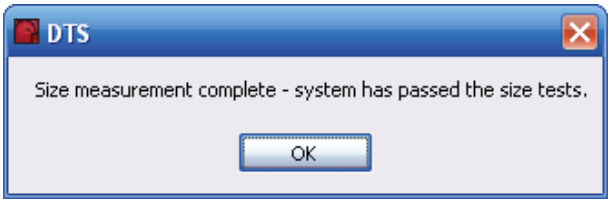

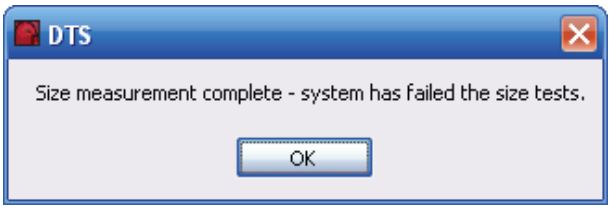

- The instrument is **setup correctly** if the performed test or tests **pass**.
- If testing **both** size and zeta potential, after the **Size Test** the instrument prompts for the capillary cell for the **Zeta Potential Test**.

The instrument is only set up correctly if both tests pass.

Note:
The results will be stored as a record in the measurement file **Installation test.dts**.

Failed test

Note:
If a **failure** message is displayed for either test, you will need to re-run both tests.

Repeat the measurement as described in the following section:

1. Insert a new sample in a new cuvette/cell and measure it, ensuring that:
    - The correct cell type is used.
    - The measurement chamber lid is closed properly.
    - There are no bubbles in the sample.
    - The cell is clean and free from fingerprints, grease and dust.

2. In addition, for a **Size Test**:

- Check that between 1.0 ml and 1.5 ml is injected into the cuvette (giving a sample depth of 10 mm to 15 mm, see Perform the Size Test on page 13 for more information).
- Check that the triangle on the cuvette faces forward (see Perform the Size Test on page 13 for more information).

3. In addition, for a **Zeta Potential Test**:
   - Wet another cell thoroughly using ethanol or methanol as described earlier, then check that there are no scratches on it. The outer surfaces of the cell should be dry. If they become wet, wipe it dry with a lint-free cloth (we recommend camera lens cleaning pads). **Do no try to clean the optical area on the front of the "U" part of the cell as this will cause small scratches which can distort the result.**
   - Check that the capillary cell is full.
   - Ensure that the cell plugs are inserted firmly.

If the test continues to fail, contact the local Malvern Panalytical representative. Before calling make a note of the instrument's serial number located on the instrument's back panel (shown below [1]) or on the pullout tray of the left side of the system.

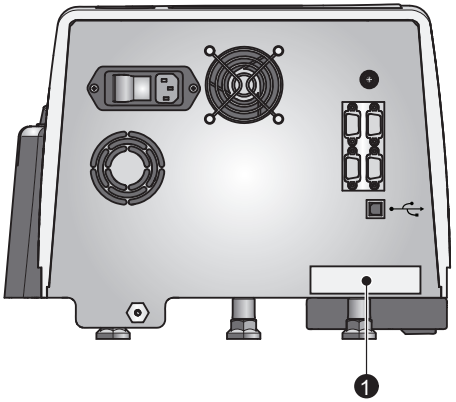

CHAPTER 3 MAKING OTHER MEASUREMENTS

Introduction 24

Running SOPs 24

Introduction

Once the instrument is setup (see Introduction on page 2) and its performance validated (see Introduction on page 12), it is ready for use. Measurements are made using **Standard Operating Procedures** (SOPs) as described in this chapter.

Malvern Panalytical supplies some default SOPs, others may be created by supervisors/advanced users.

Running SOPs

1. Select the command **Measure-Start SOP**:

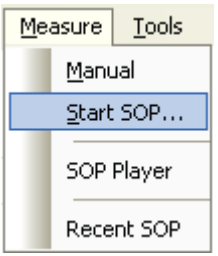

2. Available SOPs are listed in a selection window. Select the SOP to use and click the **Open** button.
3. Follow any on-screen instructions to run the SOP. Clean and load the cuvette or cell exactly as described above for the self-installation test.
4. As the SOP analysis runs, results will be displayed, as in the following example:

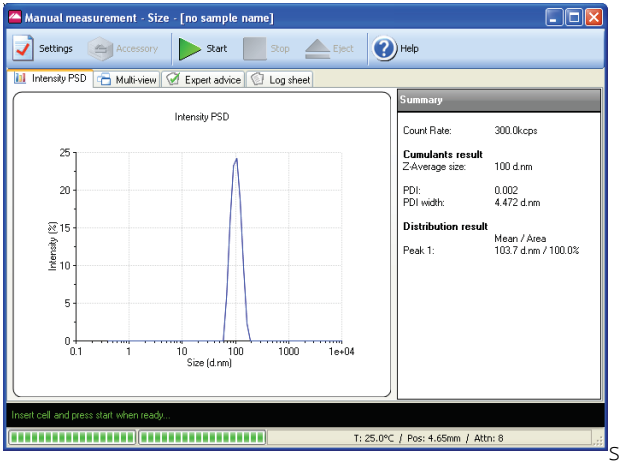

Figure 3.1 *SOP analysis results for a size test*

5. Note the messages in the status bar (near the base of the window) which shows the progress of the measurement.
6. When the measurement finishes, close the window.

To view the result, select this record and then click one of the Report tabs. The following examples displayed on the next page show:

- The **Intensity PSD (M)** report for a **size** test.
- The **Zeta potential (M)** report for a **zeta potential** test.

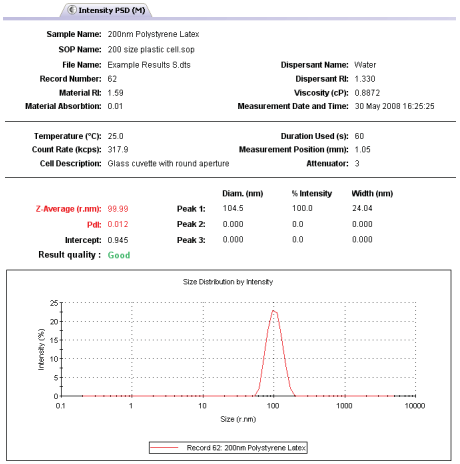

Figure 3.2 *Intensity PSD (M) report for a Size Test*

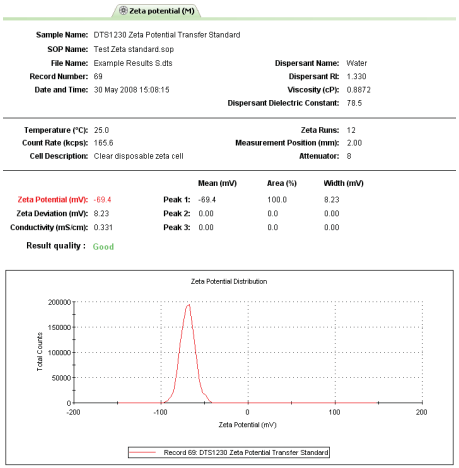

Figure 3.3 *Zeta Potential (M) for Zeta Potential Test*

MALVERN PANALYTICAL

Malvern Panalytical Ltd.
Grovewood Road, Malvern,
Worcestershire, WR14 1XZ,
United Kingdom

Tel. +44 1684 892456

Malvern Panalytical B.V.
Lelyweg 1, 7602 EA Almelo,
The Netherlands

Tel. +31 546 534 444

info@malvernpanalytical.com

MAN0383